- **Model：HXLBQ-DTA567**
- **Product Name：Cavity Band Pass Filter**
- **Frequency：361~366MHz**

★High Stop Band Rejection
★Low Pass Band Insertion Loss
★Customizable Design
★High Reliability

Technical Data Sheet

Item	Parameters
Center Frequency(F0)	363.5MHz
Pass Band Frequency	361 ~ 366MHz
Pass Band Insertion Loss	≤1.0dB
Pass Band Ripple	≤0.2dB
Pass Band Return Loss	≥20dB
Stop Band Rejection	≥80dB @ DC ~ 307MHz ≥80dB @ 420 ~ 1500MHz
Impedance	50 Ohms
Power Handling	50W Max.
Connectors	N-Female
Surface Finish	Painted Black
Temperature Range	-30℃ ~ +70℃
Net weight	TBD

Note：The actual design bandwidth will be greater than the Pass Band Frequency, and there is no bandwidth limit.

Outline Drawing: (Dimensions Unit: mm, Dimensions Tolerance: ±0.5mm)

Material

- Housing: 6061 Aluminum alloy
- Cover: LY12 Aluminum alloy
- Tuning screw: H62 Copper alloy
- Connectors: Stainless Steel
- Working Environment: Indoor
- Dimensions: 153*101*35mm

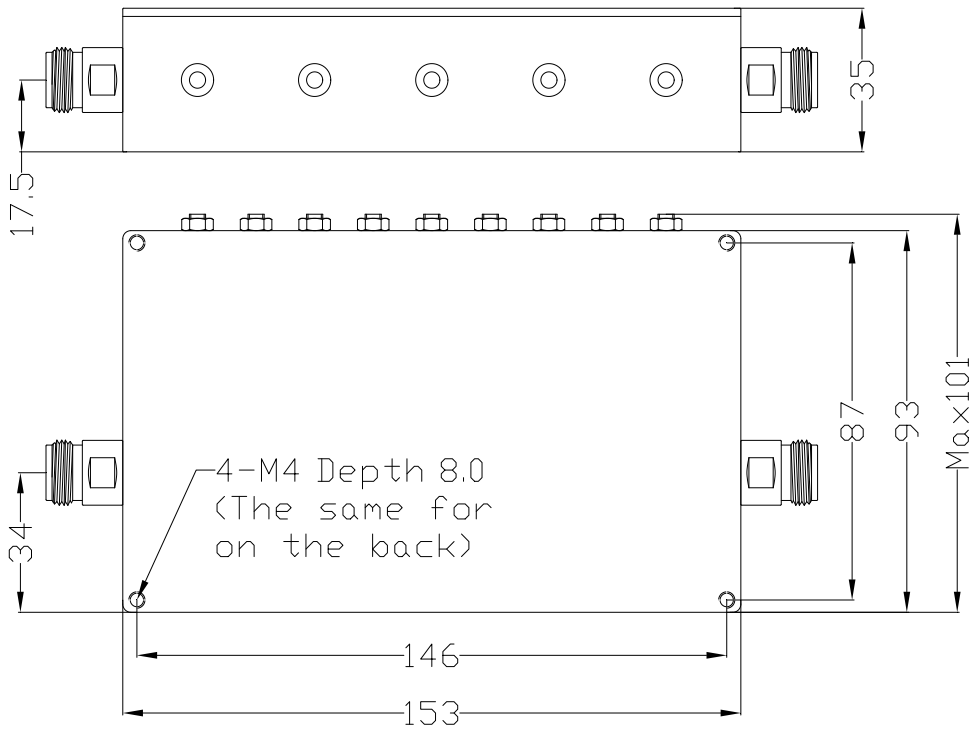

Tel:+86-029-85450833 FAX:+86-029-85450833 E-mail:sales_hxwb@163.com E-mail: sales@xahxmicrowave.com
http://www.xahxmicrowave.com http://www.hx-microwave.com Add:Yanta District, Xi'an, China