- **Model：HXGF-G02A01R**
- **Product Name：2 Way Resistance Power Divider**
- **Frequency：DC~18GHz**

★Ultra Wide Frequency
★Small Size
★Customizable Design
★High Reliability

Technical Data Sheet	
Item	**Parameters**
● Way	2
● Frequency Range	DC ~ 18GHz
● Insertion Loss	≤ 6.0dB±1.5dB
● VSWR	≤1.6:1
● Amplitude Balance	≤ ±0.8dB
● Phase Balance	≤ ±8.0°
● Impedance	50 Ohms
● Power	0.5W Max.
● Connectors	SMA-Female
● Surface Finish	Gush Arenaceous Guide Oxygen
● Temperature Range	-30℃ ~ +70℃
● Dimensions	28*24.25*12mm
● Net weight	0.03 KG

●Outline Drawing: (Dimensions Unit: mm, Dimensions Tolerance: ±0.4mm)

◆Material
- ●Housing: 6061 Aluminum alloy
- ●Cover: LY12 Aluminum alloy
- ●Connectors: Stainless Steel
- ●Other screw: Stainless Steel

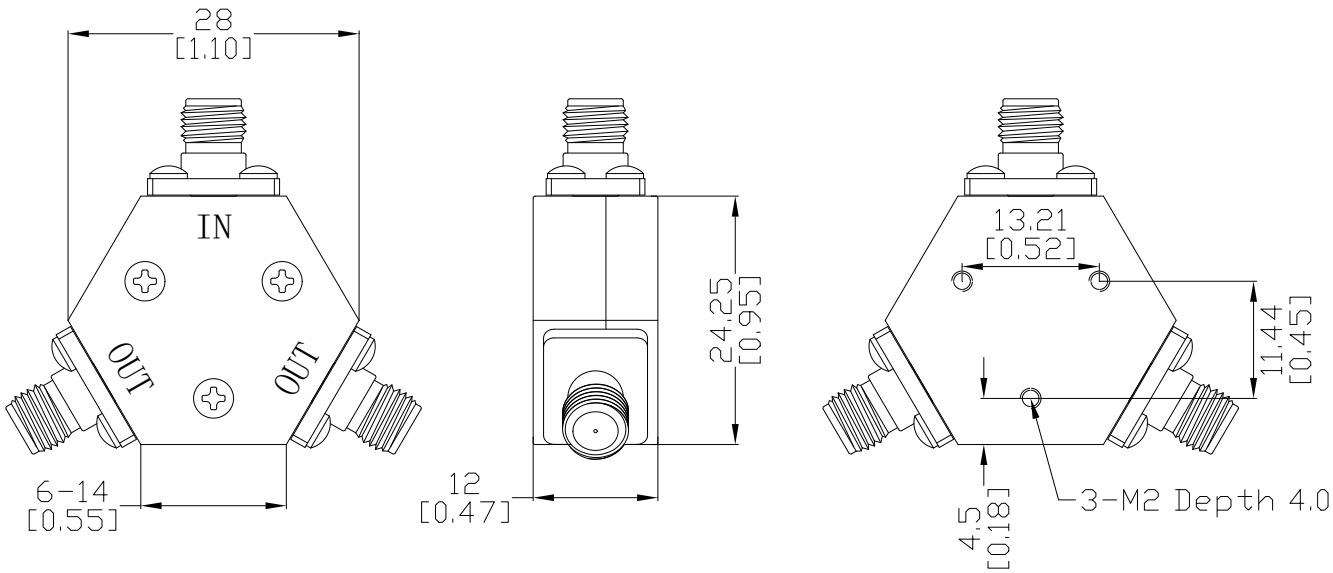

Tel:+86-029-85450833 FAX:+86-029-85450833 E-mail:sales_hxwb@163.com E-mail: sales@xahxmicrowave.com
http://www.xahxmicrowave.com http://www.hx-microwave.com Add:Yanta District, Xi'an, China