- **Model：HXLBQ-DTA312**
- **Product Name：Cavity Band Pass Filter**
- **Frequency：2483.5~2500MHz**

★High Stop Band Rejection
★Low Pass Band Insertion Loss
★Customizable Design
★High Reliability

Technical Data Sheet

Item	Parameters
● Center Frequency(F0)	2491.75MHz
● Pass Band Frequency	2483.5 ~ 2500MHz
● Pass Band Insertion Loss	≤2.0dB
● Pass Band Ripple	≤0.6dB
● Pass Band VSWR	≤1.3:1
● Stop Band Rejection	≥40dB @ DC ~ 2476.75MHz ≥40dB @ 2506.75 ~ 5000MHz
● Impedance	50 Ohms
● Power Handling	20W Max.
● Connectors	SMA-Female
● Surface Finish	Painted Black
● Temperature Range	-30℃ ~ +70℃
● Net weight	TBD

Note：The actual design bandwidth will be greater than the Pass Band Frequency, and there is no bandwidth limit.

●Outline Drawing: (Dimensions Unit: mm, Dimensions Tolerance: ±0.5mm)

●Material	●Housing: 6061 Aluminum alloy	●Connectors: H59 Copper, Plated ternary alloy
	●Cover: LY12 Aluminum alloy	●Other screw: Stainless Steel
	●Tuning screw: H62 Copper alloy	●Dimensions: 149*76*33mm

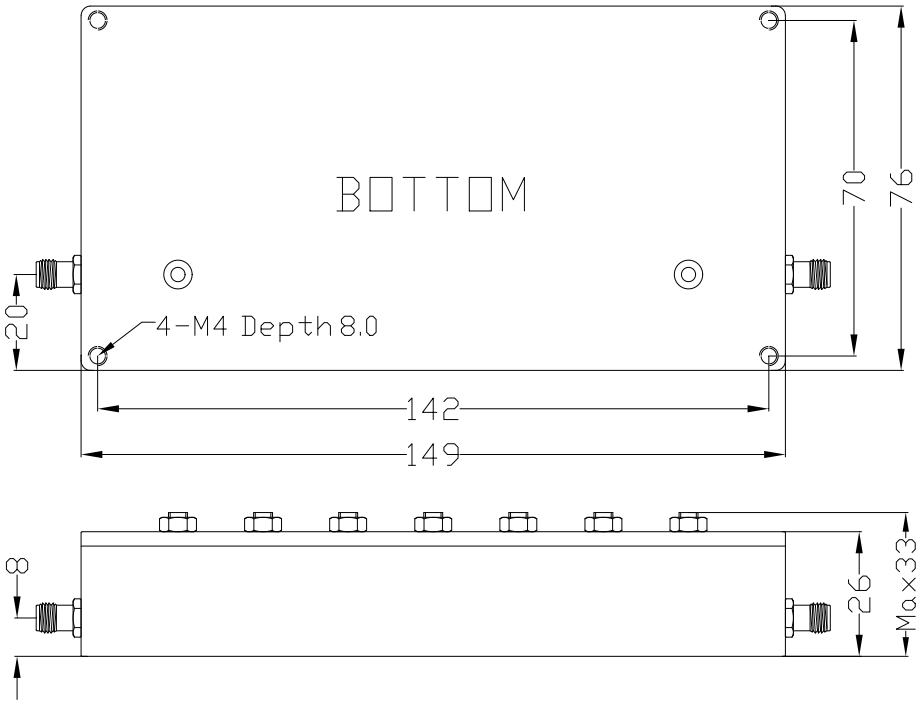

Tel:+86-029-85450833 FAX:+86-029-85450833 E-mail:sales_hxwb@163.com E-mail: sales@xahxmicrowave.com
http://www.xahxmicrowave.com http://www.hx-microwave.com Add:Yanta District, Xi'an, China