- **Model：HXGF-G4A13**
- **Product Name：4 Way Power Divider**
- **Frequency：0.4~6.5GHz**

★Ultra Wide Frequency
★Small Size
★Customizable Design
★High Reliability

| Technical Data Sheet | |
|---|---|
| **Item** | **Parameters** |
| ● Way | 4 |
| ● Frequency Range | 0.4 ~ 6.5GHz |
| ● Insertion Loss | ≤3.0dB (Does not contain theory loss 6.02dB) |
| ● VSWR | Input: ≤1.8:1 ; Output: ≤1.4:1 |
| ● Amplitude Balance | ≤ ±0.3dB |
| ● Phase Balance | ≤ ±4.0° |
| ● Isolation | ≥14dB |
| ● Impedance | 50 Ohms |
| ● Power | Forward: 30W Max. ; Reverse: 2.0W Max. |
| ● Connectors | SMA-Female |
| ● Surface Finish | Painted Black |
| ● Temperature Range | -40℃ ~ +80℃ |
| ● Net weight | TBD |

**●Outline Drawing:** (Dimensions Unit: mm, Dimensions Tolerance: ±0.5mm)

| | | |
|---|---|---|
| ◆Material | ●Housing: 6061 Aluminum alloy | ●Connectors: H59 Copper, Plated ternary alloy |
| | ●Cover: LY12 Aluminum alloy | ●Dimensions:101.6*60.9*10mm |

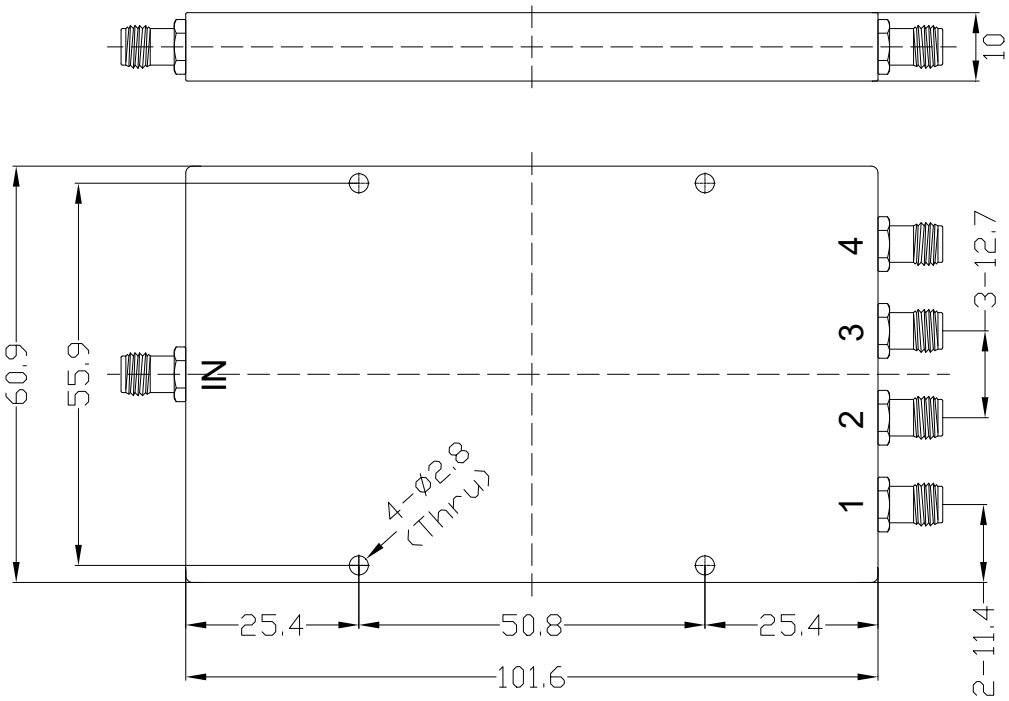



Tel:+86-029-85450833 FAX:+86-029-85450833 E-mail:sales_hxwb@163.com E-mail: sales@xahxmicrowave.com
http://www.xahxmicrowave.com http://www.hx-microwave.com Add:Yanta District, Xi'an, China