●**Product Name：High Pass Filter**
●**Model：HXLBQ-GTA39**
●**Frequency：11~40GHz**

★High Stop Band Rejection
★Low Pass Band Insertion Loss
★Customizable Design
★Small Size

Technical Data Sheet	
Item	**Parameters**
● Cut Off Frequency	11GHz
● Pass Band Frequency	11 ~ 40GHz
● Pass Band Insertion Loss	≤2.0dB @ 11 ~ 11.8GHz ≤1.0dB @ 11.8 ~ 40GHz
● Pass Band VSWR	≤1.6:1
● Stop Band Attenuation	≥50dB @ DC ~ 9.7GHz
● Impedance	50 Ohms
● Power Handling	15W Max.
● Connectors	2.92mm(K)-Female
● Surface Finish	Guide Oxygen or Painted Black
● Temperature Range	-55℃ ~ +85℃
● Material	Housing: 6061 Aluminum alloy screw: Stainless Steel Connectors: Stainless Steel
● Dimensions	15*12.7*10mm
● Net weight	0.01 KG

●**Outline Drawing:** (Dimensions Unit: mm, Dimensions Tolerance: ±0.3mm)

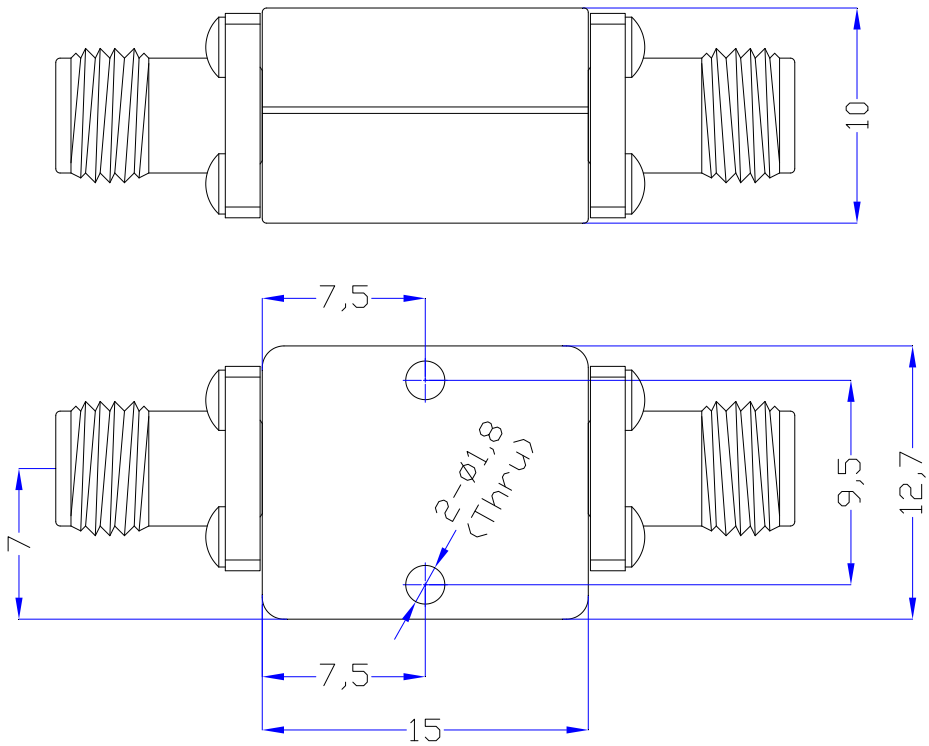

Tel:+86-029-85450833 FAX:+86-029-85450833 E-mail:sales_hxwb@163.com E-mail: sales@xahxmicrowave.com
http://www.xahxmicrowave.com http://www.hx-microwave.com Add:Yanta District, Xi'an, China